LINE	"A"	"B"	"C"	"D"	"E"	"F"	"G"	"NPT"	PART NUMBER	MATERIAL	LINE
01	7-1/2"	4-1/4"	5"	1-3/16"	15/16"	6"	3/4"	3"	TQ-3FLG X 3 NPT-CS	ASTM A283 GR.B	01
02	7-1/2"	4-1/4"	5"	1-3/16"	15/16"	6"	3/4"	3"	TQ-3FLG X 3 NPT-SS	ASTM A240 TYPE 304	02
03	6"	3-1/16"	3-5/8"	1"	3/4"	4-3/4"	3/4"	2"	TQ-2FLG X 2 NPT-CS	ASTM A283 GR.B	03
04	6"	3-1/16"	3-5/8"	1"	3/4"	4-3/4"	3/4"	2"	TQ-2FLG X 2 NPT-SS	ASTM A240 TYPE 304	04
05	7-1/2"	NONE	5"	N/A	15/16"	6"	3/4"	2"	TQ-3FLG X 2 NPT-CS	ASTM A283 GR.B	05 C
06	7-1/2"	NONE	5"	N/A	15/16"	6"	3/4"	2"	TQ-3FLG X 2 NPT-SS	ASTM A240 TYPE 316L	06 A C
07	6"	NONE	3-5/8"	N/A	3/4"	4-3/4"	3/4"	1"	TQ-2FLG X 1 NPT-CS	ASTM A283 GR.B	07 C
08	6"	NONE	3-5/8"	N/A	3/4"	4-3/4"	3/4"	1"	TQ-2FLG X 1 NPT-SS	ASTM A240 TYPE 316L	08 A C
09	4-1/4"	1-15/16"	2"	11/16"	9/16"	3-1/8"	5/8"	1"	TQ-1FLG X 1 NPT-SS	ASTM A240 TYPE 304	09 C
10	4-1/4"	1-15/16"	2"	11/16"	9/16"	3-1/8"	5/8"	1"	TQ-1FLG X 1 NPT-CS	ASTM A283 GR.B	10 C
11	7-1/2"	4-1/4"	5"	1-3/16"	15/16"	6"	3/4"	3"	TQ-3FLG X 3 NPT-316	ASTM A240 TYPE 316L	11
12	6"	3-1/16"	3-5/8"	1"	3/4"	4-3/4"	3/4"	2"	TQ-2FLG X 2 NPT-316	ASTM A240 TYPE 316L	12
13	4-1/4"	1-15/16"	2"	11/16"	9/16"	3-1/8"	5/8"	1"	TQ-1FLG X 1 NPT-316	ASTM A240 TYPE 316L	13 C
14	5"	2-9/16"	2-7/8"	7/8"	11/16"	3-7/8"	5/8"	1-1/2"	TQ-1.5FLG X 1.5 NPT-CS	ASTM A283 GR. B	14 C

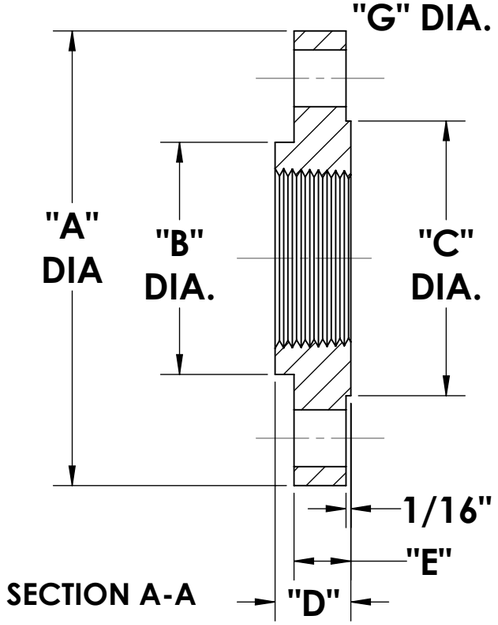

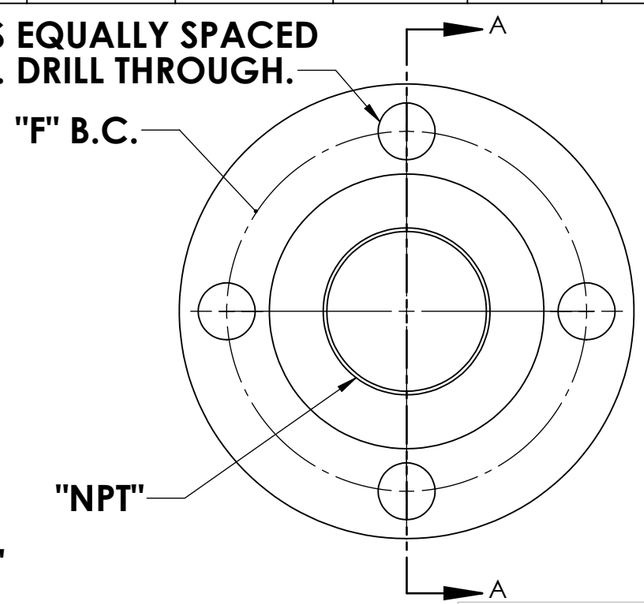

REF. 2FLG X 2 SHOWN

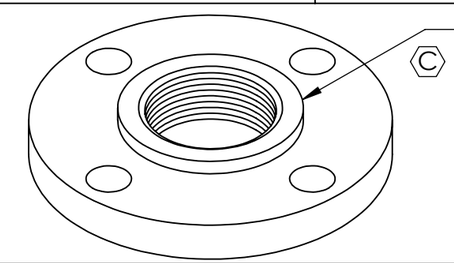

NOTE: HUB FEATURE NOT ON LINE ITEMS 05, 06, 07 AND 08 WHICH HAVE A FLAT SURFACE AND DIM "D" IS NON APPLICABLE, N/A.

REVISIONS				
ZONE	REV.	DESCRIPTION	DATE	APPROVED
	A	INITIAL RELEASE 4/18/2014* A REV LINE 06 & 08 MATERIAL WAS 304SST	9/25/2015	
	B	REDRAWN 3D MODELS AND SHEET FORMAT	10/4/2017	
	C	LINE ITEMS 05, 06, 07, 08 DIM "B" IS NONE, DIM "D" IS N/A *ADD NOTE * DIM "B" ON 09, 10 & 13 1-15/16" WAS 2-5/16" * ADDED LINE 14	5/12/2020	JCB 05/12/2020

PROPRIETARY AND CONFIDENTIAL

THE INFORMATION CONTAINED IN THIS DRAWING IS THE SOLE PROPERTY OF TRANSQUIP INC.. ANY REPRODUCTION IN PART OR AS A WHOLE WITHOUT THE WRITTEN PERMISSION OF TRANSQUIPINC. IS PROHIBITED.

NEXT ASSY	USED ON
APPLICATION	

UNLESS OTHERWISE SPECIFIED:

DIMENSIONS ARE IN INCHES
TOLERANCES:
X.XX = ±.03
X.XXX = ±.015
X.XXXX = ±.005

INTERPRET GEOMETRIC TOLERANCING PER:

MATERIAL

FINISH

DO NOT SCALE DRAWING

	NAME	DATE
DRAWN	R. CRAIG	10/4/2017
CHECKED		
ENG APPR.		
MFG APPR.		
Q.A.		

COMMENTS:

TransQuip Inc.

TITLE:

1", 2" & 3"- 150# THREADED FLANGE

SIZE	DWG. NO.	REV
B	TRQ-2014-0418	C

SCALE: 1:2 | WEIGHT: | SHEET 1 OF 1